Head-Tracking Monitor Arm Implementation with Face Detection

JUNBYUNG PARK – 3RD YEAR DISSERTATION

1. Introduction

We live in a time where our devices are incredibly smart. Our phones know our location, our watches track our health, and our screens display millions of colours with perfect accuracy. However, there is one piece of technology that has been completely left behind: the monitor stand.

Despite all the advancements in display panels, the standard monitor arm is still just a static piece of metal. It holds the screen in one place and expects the user to sit perfectly still in front of it. If the user moves, the screen stays behind. This creates a strange gap in our technology: we have highly advanced computers sitting on "dumb" mechanical stands. This project addresses that gap by proposing a monitor arm that is just as smart as the computer it holds.

Background and Motivation

Convenience and Portability

The main reason for this project is simple, static monitors are inconvenient for the way we live today. We are no longer just sitting at desks for eight hours straight. In modern home environments, people are constantly multitasking such as cooking in the kitchen, taking care of children, or moving between different tasks.

When a user is busy and their hands are full, they cannot stop to manually adjust their screen. A static monitor becomes a nuisance because it forces the user to stay in one specific spot to see clearly. This project proposes a "Head-Tracking Monitor Arm" that solves this by acting like a cameraman. Using computer vision, it tracks the user's face and automatically turns the screen to face them. This brings a new level of convenience, allowing the user to move freely around the room while keeping the optimal viewing angle, amplifying the convenience of the display and allowing for seamless interaction even when the user is in motion.

Health and Ergonomics

The second critical motivation is user health. The rising prevalence of "tech neck"—technically known as kyphotic cervical curvature—is a major health problem. Research indicates that the prevalence of this condition has jumped drastically, from 4.5% in 2006 to 16.7% in 2018.

Looking closely at monitor usage, this issue is often caused by screens being positioned too low or at awkward angles. This system addresses this by allowing the user to set a "defined height" in the software. The arm then guides the monitor to match the user's head level automatically. As the user sits up or changes posture, the monitor adjusts to maintain that

ergonomic alignment. By moving the screen to the user, rather than forcing the user to move to the screen, we can naturally encourage better posture.

Key Objectives

1. **Design & Simulation:** To complete the theoretical design of the monitor arm, including all kinematic and torque calculations, the CAD model in Fusion360, and the schematic and layout for a custom Printed Circuit Board (PCB).
2. **Software Development:** To develop a robust computer vision script in Python that uses a camera to detect a user's face and output directional control signals to a Raspberry Pi.
3. **Hardware Prototyping:** To manufacture all mechanical parts using 3D printing, fabricate and assemble the custom PCB, procure all electronic components, and construct the final scaled-down prototype.
4. **System Integration & Evaluation:** To integrate the software and hardware, calibrate the system for smooth and accurate tracking, and conduct comprehensive testing to evaluate the prototype's performance against the project aims.

Overall Aim and Objectives

Overall Aim: To design, build, and test a scaled-down prototype of a dual-axis monitor arm that uses computer vision to track a user's head and automatically adjust its position. The prototype will be designed to hold a 12.9-inch iPad and will be constructed from 3D-printed materials to fit budgetary constraints.

Objectives:

1. **Design Phase:**
   a. Conduct calculations for forward kinematics and torque to determine the required cross-sectional area of components and select appropriate servo motors.
   b. Develop and finalize the CAD model of the monitor arm using Fusion360, including joint implementation and prismatic rail design.
   c. Conduct beam bending calculations to identify appropriate cross-sectional area of the
   d. Design the schematic and layout for a custom PCB to manage power distribution and motor control signals from the Raspberry Pi.
2. **Development Phase**:
   a. Develop the face detection software using Python with open computer vision libraries to process a camera feed and output directional signals.
   b. Program a Raspberry Pi microcontroller to interpret signals from the Python script and actuate the servo motors accordingly.
   c. Manufacture all components using 3D printing (ABS) and procure all necessary electronic components (servos, Raspberry Pi, power supply, etc.).
   d. Send PCB fabrication request then Assemble the custom PCB by soldering the electronic components onto the fabricated board. Followed by following
   e. Assemble the mechanical structure and complete the electronic wiring,
3. **Evaluation Phase:**
   a. Integrate the software and hardware components, ensuring the Python script can reliably control the monitor arm via the Raspberry Pi.

b. Calibrate the system to ensure smooth and accurate tracking of the user's head.
c. Test the fully assembled prototype against the predefined criteria, documenting its performance and identifying areas for improvement.

2. Mechanical Design

2.1. 3 DOF Joints Topology Selection:

A primary challenge in monitor arm design is balancing the required range of motion against the static holding torque. Two kinematic configurations were evaluated for this project: a fully articulated Revolute-Revolute-Revolute (RRR) arm and a Prismatic-Revolute-Revolute (PRR) configuration.

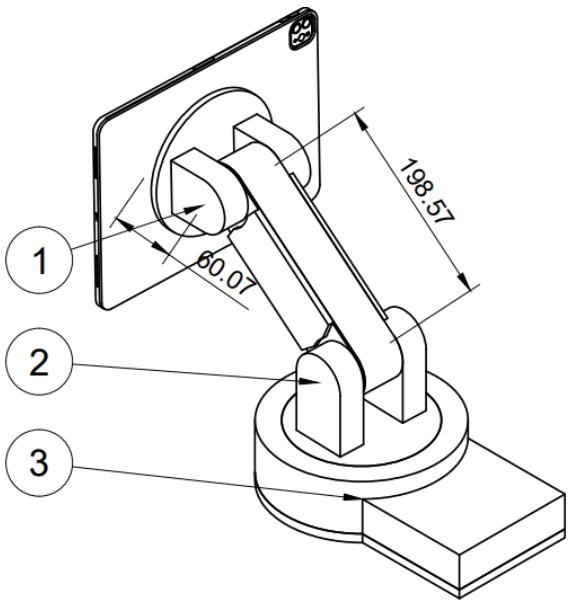

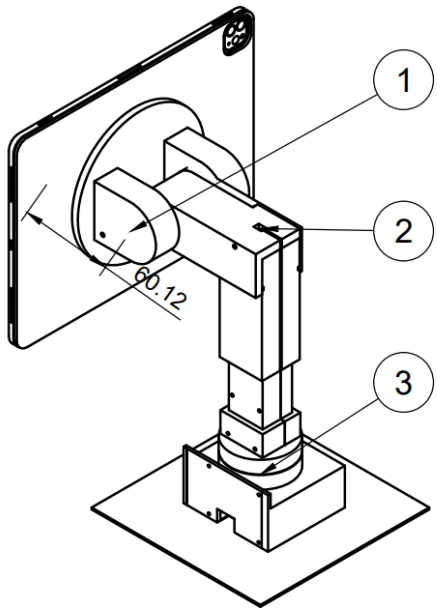

2.1.1. Analysis of the RRR Configuration:

There are various advantages that can be obtained using RRR joint, greater freedom of workspace and orientations, providing more availability of movement options. However, it will require such a high torque in its joint. This becomes challenging when using a monitor heavier than the iPad used in this project. When the monitor is not moving, the servos must consume power to fight gravity (holding current). This leads to overheating and jitter.

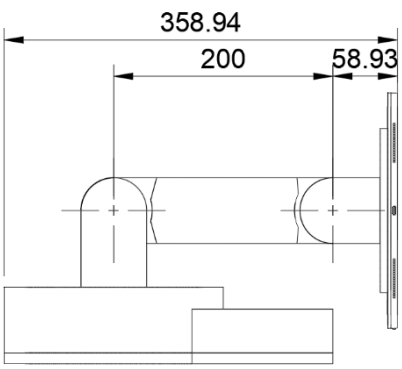

Max torque on RRR Arm occurs when the load is maximum distance away from the joint, with maximum load (exerted full gravity force) perpendicular to the joint.

Torque at such condition can be calculated by equation:

$$\tau_{max} = (m_{monitor} \cdot g \cdot L_{arm}) + (m_{arm} \cdot g \cdot d_{center\ of\ gravity\ of\ the\ arm})$$

$$\tau_{\max} = (0.685 \cdot 9.81 \cdot 6.01) + (1.38 \cdot 9.81 \cdot 169.09) = 116.77 \text{ Kg cm}$$

It will require even more torque at the start of the motion to overcome the inertia, when 116.77 Kg is already very high and will consume Significant power to overcome the gravity.

2.1.2. Analysis of the RPR Configuration:

This design utilizes a vertical lead screw (Prismatic joint) for elevation, followed by two rotational joints for Pan and Tilt.

For Monitor tilt,

Physical			
Mass	1692.955 g	Volume	9.312E+5 mm^3
Density	0.002 g / mm^3	Area	5.748E+5 mm^2
World X,Y,Z	0.00 mm, 0.00 mm, 0.00 mm	Center of Mass	-0.593 mm, -48.942 mm, 0....
Bounding Box			
Moment of Inertia at Center of Mass (g mm^2)			
Moment of Inertia at Origin (g mm^2)			
Ixx	9.961E+06	Ixy	-46311.892
Ixz	-79627.157	Iyx	-46311.892
Iyy	1.482E+07	Iyz	34346.123
Izx	-79627.157		

Static torque:

$$\tau_{\text{gravity}} = \text{Mass} \times \text{g} \times \text{r}$$

$$\tau_{\text{gravity}} = 1.693 \text{ kg} \times 9.81 \text{ m/s}^2 \times 0.0489 \text{ m}$$

$$\tau_{\text{gravity}} = 16.61 \text{ N} \times 0.0489 \text{ m}$$

$$\tau_{\text{gravity}} \approx 0.812 \text{ N} \approx 8.28 \text{ Kg cm}$$

Apply Formula $(\tau = I \cdot \alpha)$

Dynamic Torque

Using a maximum acceleration of roughly (52RPM) @7.4V $\approx 2.72 \text{ rad/s}^2$:

$$\tau_{dynamic} = 0.00996 \text{ kg} \cdot \text{m}^2 \times 2.73 \text{ rad/s}^2 \approx 0.0272 \text{ N} \approx 0.277 \text{ Kg cm}$$

Total Required Torque:

$$\tau_{total} = \tau_{gravity} + \tau_{dynamic}$$

$$\tau_{total} = 0.812 \text{ Nm} + 0.027 \text{ Nm} = 0.822 \text{ N m} \approx 8.56 \text{ Kg cm}$$

For Pan

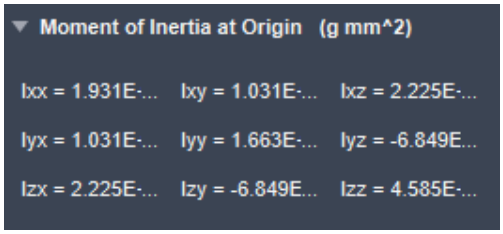

at rotational axis = z-axis.

The Pan axis rotates about the vertical Z-axis. Since gravity acts parallel to this axis, the servo does not bear the static weight of the arm (which is supported by the bearing/structure). The load is purely inertial.

Using the X and Y coordinates for the Z-axis radius of gyration ($r_{gyration}$):

$$r_{gyration} = \sqrt{x^2 + y^2} = \sqrt{0.0036^2 + 0.1134^2} \approx 0.1135 \text{ m}$$

$$I_{zz} \approx m \cdot r_{gyration}^2 = 2.233 \cdot (0.1135)^2 \approx 0.029 \text{ kg} \cdot \text{m}^2$$

Assuming the servo running at maximum speed at no load, (66RPM) at 7.4V≈

$$T_{pan} = 0.029 \cdot 5 = 0.145 \text{ Nm} \quad (\approx 1.5 \text{ kg} \cdot \text{cm})$$

2.2. Actuator Selection

The selection of servos and linear actuator were driven by the torque requirements derived in Section 2.1 and the availability of components.

2.2.1 Pan and Tilt Servos

To handle the inertia of the monitor during rapid head-tracking adjustments, high-torque servos were required.

- **Pan Axis:** A DFRobot 25kg·cm (360°) servo was selected to rotate the entire arm assembly.
- **Tilt Axis:** A DFRobot 35kg·cm (180°) servo was selected for the pitch mechanism. While 15kg options were available, the 35kg/25kg variants were chosen to provide a safety factor of approximately 1.5, ensuring smooth operation without stalling under the dynamic loads of the iPad.

2.2.2. 15kg vs 25kg vs 35kg

Max torque required = $56.2mm \times 685g + 54mm \times (200g) + 28.528 \times 494.989 = 6.88$

For a robust design, considering the monitor arm operates for a significant amount of time, the actuator must operate within its rated torque—the torque level at which the motor can operate continuously without overheating.

The theoretical torque required to hold the monitor in position was calculated to be 8.56 kg cm (refer to Section 2.1.2 for calculation). This value was compared against the rated torque specifications of potential servo candidates (Table 1).

Servo	**Rated Current**	**Rated Load 7.4V**	**Stall Current 7.4V**	**Max Load 7.4V**
SER0063 (20Kg)	1.0 A	6.5 Kg	3.0 A	20 Kg
SER0066 (25Kg)	1.2 A	8.5 Kg	3.5 A	25 Kg
SER0067 (35Kg)	1.2 A	11.8 Kg	3.9 A	35.5 Kg

Table 1

Selection Analysis:

As shown in Table 1, the SER0066 (25kg) servo offers a rated load of 8.5 kg, which is marginally lower than the calculated requirement of 8.56 kg. Utilizing this motor would force it to operate constantly at or slightly above its rated limit, leading to excessive heat generation, increased wear, and a high probability of premature failure during extended tracking sessions.

In contrast, the SER0067 (35kg) servo provides a rated load of 11.8 kg. This provides a safety margin of approximately 37% above the required 8.56 kg load $(1 - 8.56/11.8)$, ensuring the motor operates comfortably within its efficient range. Consequently, the SER0067 was selected to guarantee the system's stability and durability.

2.2.3. Linear actuator selection

The vertical adjustment mechanism (prismatic joint) required a linear motion system capable of lifting the monitor assembly while maintaining a compact form factor. Two primary transmission mechanisms were evaluated for this purpose: a Rack and Pinion system and a Lead Screw driven actuator.

1. Mechanism Comparison:

- Rack and Pinion: While this mechanism offers high-speed actuation and direct translation of rotary to linear motion, it typically lacks high torque density. Furthermore, rack and pinion systems require continuous power or a separate mechanical brake, otherwise, the weight of the monitor would force the arm to slide down when the system is powered off.
- Lead Screw: In contrast, a screw-based actuator provides significant mechanical advantage, converting high-speed low-torque motor rotation into low-speed high-force linear motion. Crucially, lead screw mechanisms are typically self-locking (non-back-drivable) due to the friction angle of the threads.

2. Application Specificity: The facial tracking algorithm prioritizes smooth, precise positioning over rapid, agile movements in horizontal directions and tilting. However, high-velocity vertical movement is not required. Therefore, the slower actuation speed of the screw mechanism is an acceptable trade-off for its superior load-bearing capacity and stability.

3. Component Selection: Based on this analysis, the FIT0806 (6V DC Linear Actuator) was selected.

- Torque/Force: It provides sufficient thrust to lift the calculated load of the monitor assembly.

- Form Factor: The integrated design is significantly more compact than a custom rack-and-pinion assembly, aiding the aesthetic requirements of the desktop environment.
- Availability and Standardization: Given the time constraints of the project, the availability of the FIT0806 through standard suppliers (Farnell) allowed for immediate procurement, mitigating supply chain risks associated with custom fabricated parts.

2.2.4. Deflection Test and Material Selection

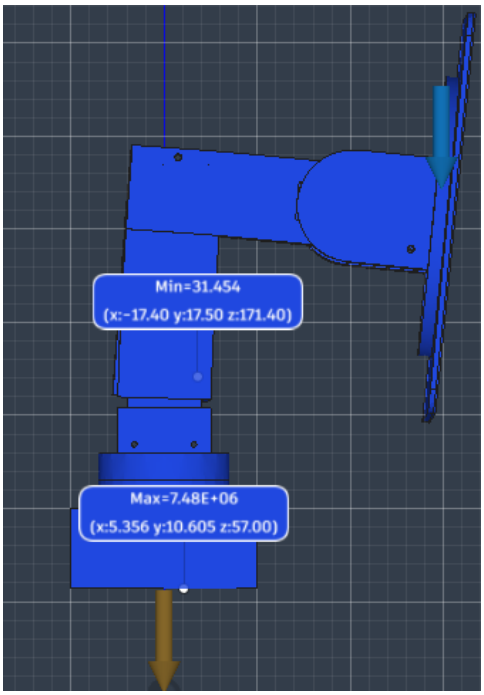

To validate the mechanical design prior to fabrication, a static stress simulation (Finite Element Analysis) was conducted on the main monitor arm assembly. The primary objective was to ensure minimal deflection under load, as the accuracy of the facial tracking algorithm relies heavily on the camera maintaining a stable, vibration-free coordinate reference.

The simulation applied the calculated monitor load and component weights to the assembly. The results indicated a minimum Safety Factor (SF) of 31.45.

$$SafetyFactor = \frac{\text{Yield Strength of Material}}{\text{Maximum Von Mises Stress}}$$

While a Safety Factor of 31.45 significantly exceeds the standard engineering requirement for static structures (typically 2.0 to 4.0), this high value is justified by two key design constraints:

1. Operational Rigidity (Stiffness over Strength):

The critical failure mode for this system is not material yielding (breaking), but rather elastic deformation (bending). Even minor deflection in the arm would introduce noise into the facial tracking feedback loop. The geometric bulk required to achieve near-zero deflection naturally results in low stress concentrations, yielding a high safety factor. This ensures the monitor remains perfectly steady during servo actuation.

2. Geometric Constraints (Component Housing):

The dimensions of the arm links were primarily dictated by the internal volume required to house the SER0067 (35kg) and SER0066 (25kg) servos, rather than stress requirements. To accommodate these actuators and the necessary wiring looms, the structural shell required a minimum cross-sectional area that inherently exceeds the load-bearing requirements of the monitor weight. (and provide smooth movement for tracking)

Conclusion:

The analysis confirms that the design is structurally robust with a negligible risk of failure. The high safety factor confirms that the arm will operate well within the elastic region of the material, providing the rigid platform necessary for high-fidelity computer vision applications.

3. Software Design

Facial detection uses python open CV, The core requirement of the facial tracking system is real-time detection with low latency. While Deep Learning approaches (e.g., CNNs) offer high accuracy, they impose a significant computational load. Given that the system is powered by a Raspberry Pi, which must simultaneously handle image processing and motor control logic, a lightweight solution was prioritized.

Consequently, the Viola-Jones algorithm using Haar Feature-based Cascade Classifiers was selected. This method, implemented via the OpenCV library, offers a high frame rate capability suitable for the dynamic tracking required by the monitor arm.

3.1. Software Logic and Implementation

The tracking software was developed in Python 3.12 The detection pipeline operates in a continuous loop with the following distinct stages:

Image Acquisition: Video frames are captured from the webcam using

cv2.VideoCapture(0)

To ensure real-time performance, the resolution is managed at the capture stage to prevent buffer overflow.

Pre-processing (Grayscale Conversion): As shown in the implementation, raw frames are immediately converted from BGR (Blue-Green-Red) to Grayscale:

This conversion reduces the data dimensionality by a factor of three (from 3 channels to 1), significantly accelerating the detection process without compromising the geometric features required for face detection.

Detection Parameters: The detectMultiScale function is tuned with specific hyperparameters to balance sensitivity and noise reduction:

Scale Factor (1.1): This specifies how much the image size is reduced at each image scale. A value of 1.1 allows for a pyramidal search, enabling the detection of faces at varying distances from the camera.

MinNeighbors (5): This parameter specifies how many neighbors each candidate rectangle should have to retain it. Setting this to 5 filters out false positives (noise), ensuring the monitor does not track random background objects.

Coordinate Extraction: Upon detection, the algorithm returns a bounding box tuple (x, y, w, h), where (x, y) represents the top-left corner, and w, h represent width and height.

The centroid of the face is calculated as:

$$C_{face} = \left(x + \frac{w}{2}, y + \frac{h}{2}\right)$$

The tracking error is then derived by comparing C_{face} to the center of the video frame resolution $(w/2, h/2)$

3.2. Servo Control Software

Max Angle, How PWM is implemented, Motor Control Algorithm (PID, tracking error)

3.3. Software Algorithm

-Diagram (software not fully developed yet)

4. Electrical Design

4.1. Servo Control

The primary actuation for the monitor's base rotation and tilt is provided by high-torque digital servo motors. Precise angular positioning is achieved using Pulse Width Modulation (PWM) signals generated by the Raspberry Pi microcontroller.

2.2.3. Servo Specification

Control characteristics

- Control Signal: PWM
- Angle: 360° (at 500→2500μsec)
- Angle Difference: ≤1°
- Return Difference: ≤1°
- Neutral Position: 1500μsec
- Dead Band Width: ≤4μsec
- Rotation Direction: Counterclockwise (from 1500 → 2000μsec)
- Pulse Width Range: 500→2500μsec
- Signal High Voltage: 2-5V
- Signal Low Voltage: 0-0.45V
- Signal Period: 20ms

The servos are controlled via a standard 50 Hz PWM signal. The duty cycle of the pulse determines the angular position of the shaft. A pulse width of 1500 μs centers the servo, while variations between 500 μs and 2500 μs command the full 360° or 180° range.

Operating Voltage: 5-8.4 V, servos running optimally at 8.4V, providing significant holding torque (3.48 Nm and 2.45 Nm) necessary to combat the moment arm generated by the monitor's weight.

Feedback: Unlike standard continuous rotation servos, these utilize magnetic encoders, allowing for absolute positioning which is critical for ensuring the monitor faces the user directly without drifting over time.

4.2. Linear Actuator control

4.2.1. Specifications of Linear Actuator

For the vertical height adjustment (the prismatic joint), a FIT0806 DC Linear Actuator is utilized. Unlike the servos, which have internal control circuitry, this actuator is a raw 6V DC motor requiring an external driver to manage current direction and speed.

4.2.2. H-Bridge Implementation

To achieve bidirectional movement (extension and retraction), a TB6612FNG Dual DC Motor Driver is integrated. This component utilizes an H-Bridge topology, allowing the Raspberry Pi to reverse the polarity of the voltage applied to the motor terminals.

- Logic: Two logic pins (IN1, IN2) control the direction (CW/CCW), while a PWM signal applied to the PWM pin controls the speed of extension.
- **Voltage Regulation Strategy:** The actuator is rated for 6 V, while the main power rail supplies 8V. The initial design utilizes PWM duty cycle limiting (software-based voltage regulation) to prevent over-voltage damage to the actuator. A hardware buck converter remains a contingency option should thermal issues arise during testing.

3. Power Consumption & Management

The power distribution network is the most critical aspect of the safety design, given the potential for high current draw during simultaneous motor operation.

Load Analysis: The total theoretical current draw was modeled under two conditions: *Running Load* (nominal operation) and *Stall Load* (locked rotor condition).

$$I_{total_stall} = I_{servo1_stall} + I_{servo2_stall} + I_{actuator_stall}$$

$$I_{total_stall} \approx 3.9\text{A} + 3.5\text{A} + 0.5\text{A} = 7.9\text{A}$$

Power Supply Selection: A **Multicomp Pro AC/DC Power Supply** rated at 8 V DC and 6 A (48W) was selected.

While the theoretical peak stall current (7.9 A) exceeds the supply's rating (6 A), the nominal running load is calculated to be approximately 2.2 A. 6A supply provides a safety factor of 2.7 during normal operation, which is sufficient and cost-effective compared to a 10A industrial supply.

- **Software-Defined Power Management:** To mitigate the risk of exceeding the 6 A limit during startup or rapid movements, a "Sequential Actuation" strategy is implemented in the control software.
  - The system is programmed to prioritize movements: Base rotation settles before tilt adjustment begins, and vertical extension occurs independently.
  - This ensures that the transient current spikes of multiple motors starting simultaneously never overlap, keeping the total draw well within the safe operating area (SOA) of the PSU.